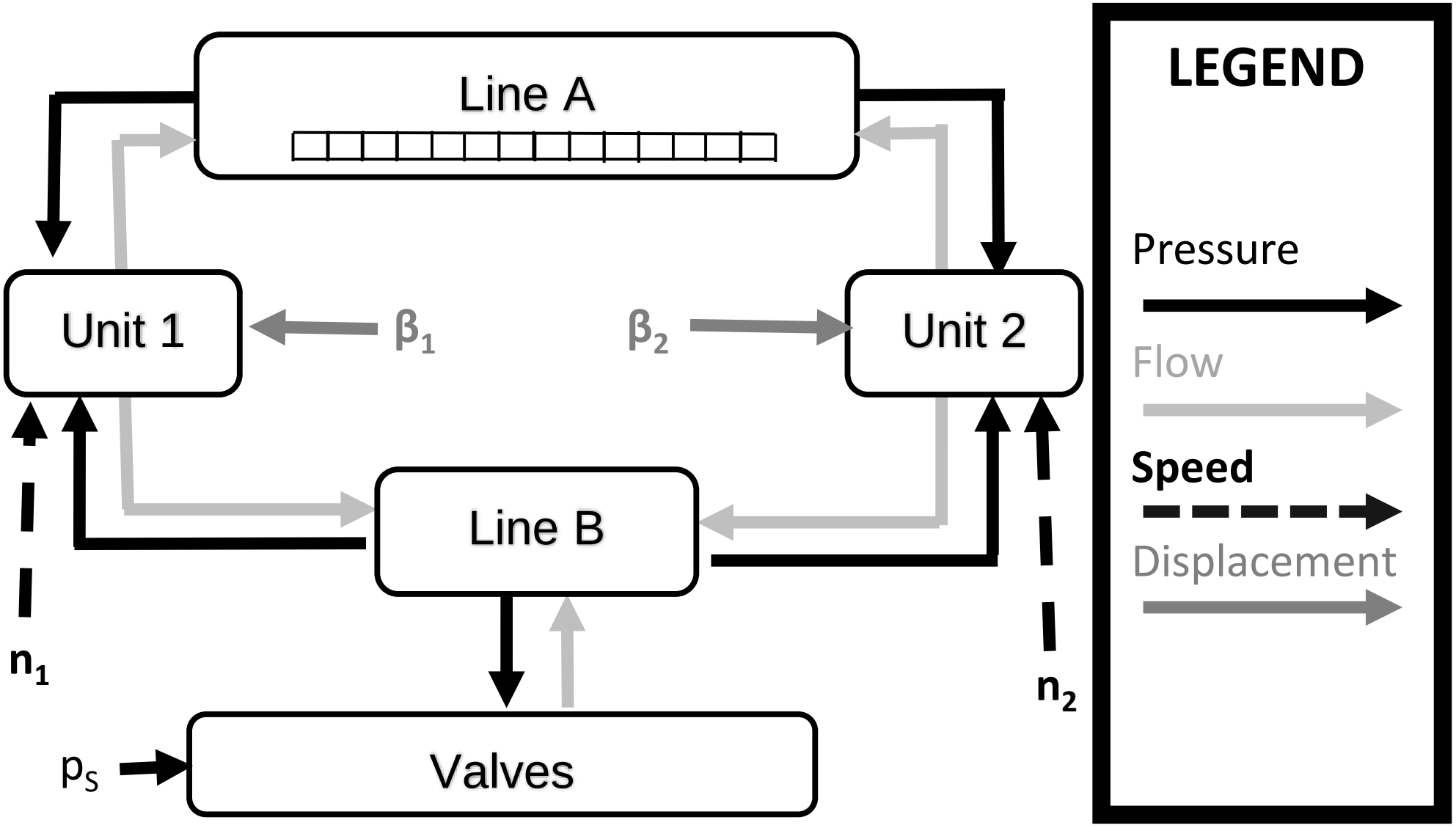
Line A
Unit 1
Unit 2
Line B
Valves
β_1
β_2
n_1
n_2
p_S
LEGEND
Pressure
Flow
Speed
Displacement